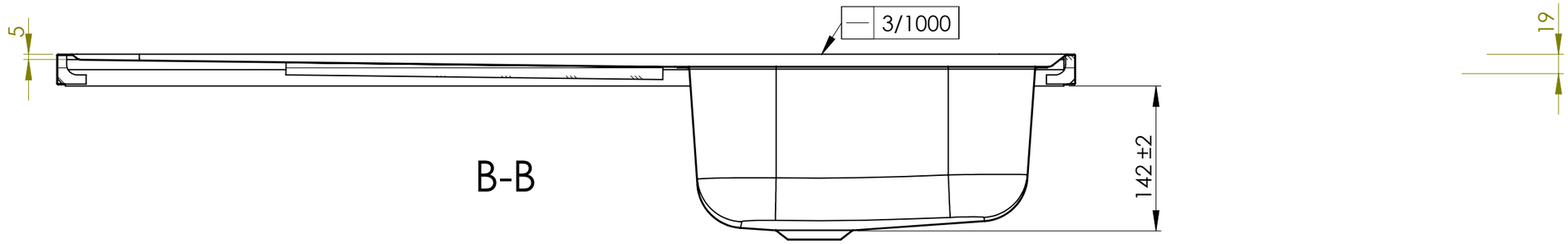

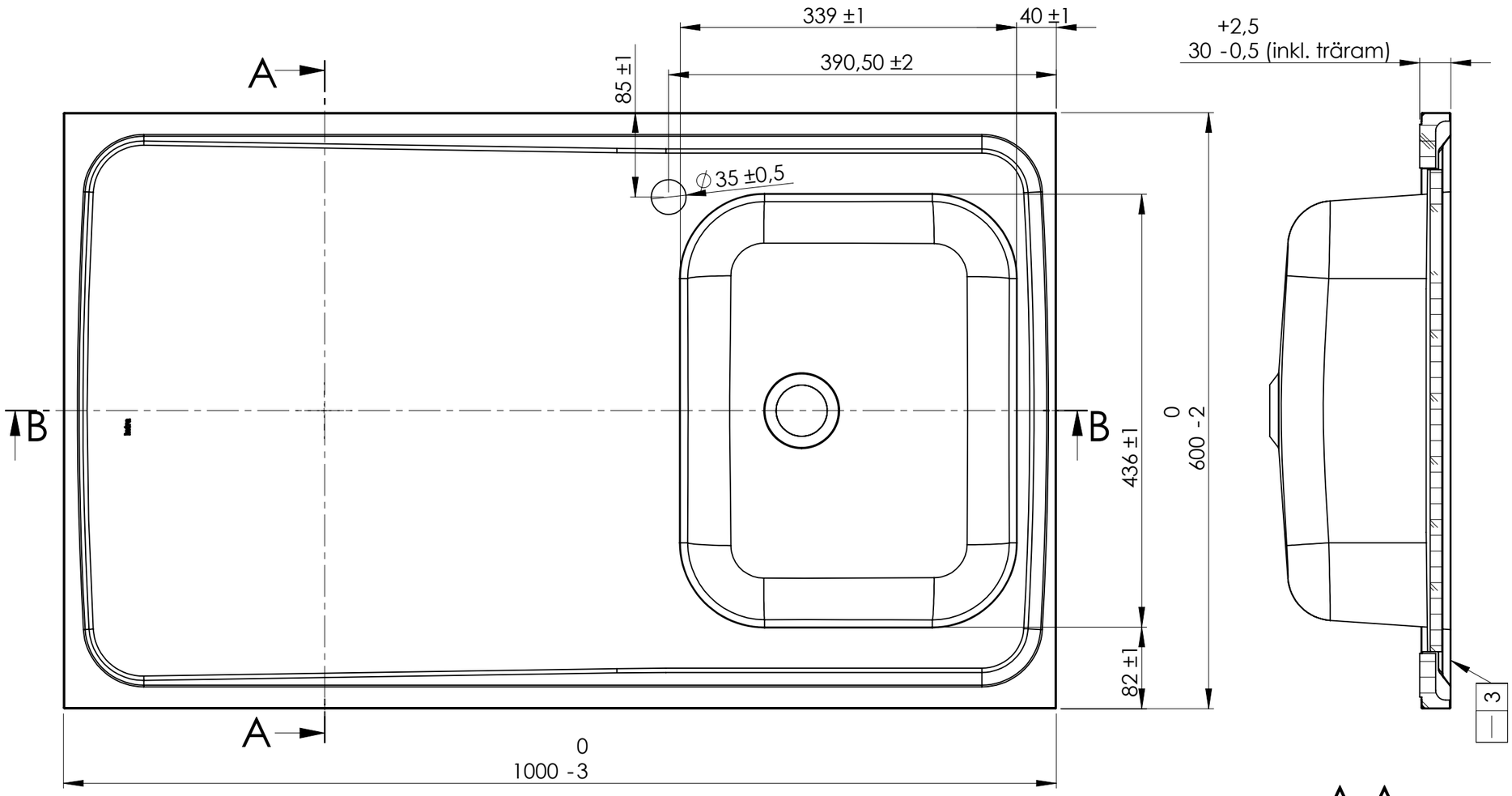

(Right model shown)

Atlantic F10

14230-10