intra
SCANDINAVIAN DESIGN

Atlantic H 610-KV H15-610-KV

Art. no. AH15-610-KV
GTIN 7393069019995

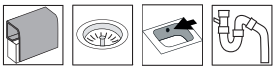



Cabinet size	80
Overall dimension in mm	1500 x 610 x 30
Bowl dim. in mm	340 x 436 x 160
Waste hole dim. in mm	95
Material	EN 1.4301, AISI 304, SS2333
Material thickness in mm	0,7

Description
Temporarily out of stock

Reversible sit-on kitchen sink with two big bowls.
Delivers with basket waste, overflow and water trap.

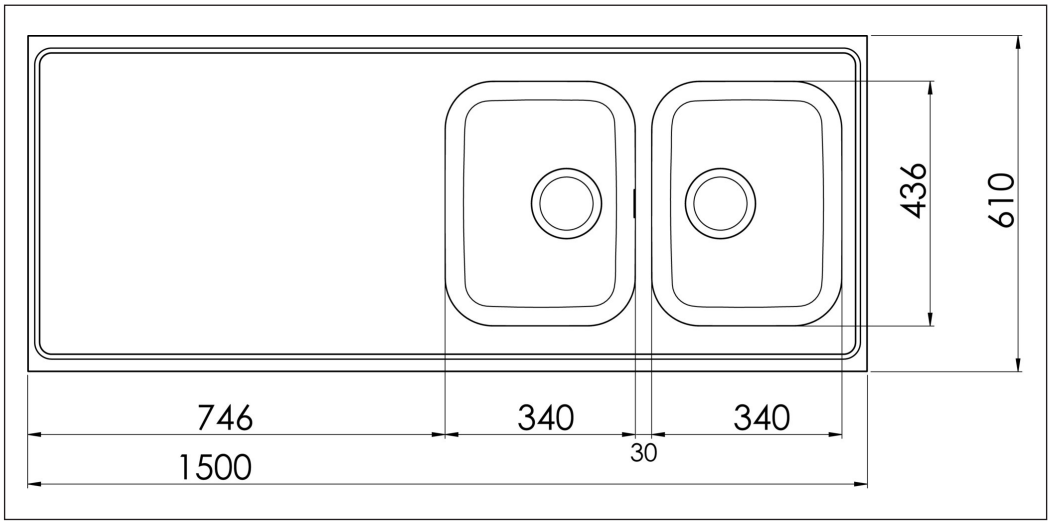

Optional



CE