intra
SCANDINAVIAN DESIGN

Urinal URB-FF

Art. no. URB-FF
GTIN 7393069023909

Description
Wall hung stainless steel flush free urinal. Equipped with waste trap and membrane for flush free usage. With removable inspection panel with security screws at the bottom.
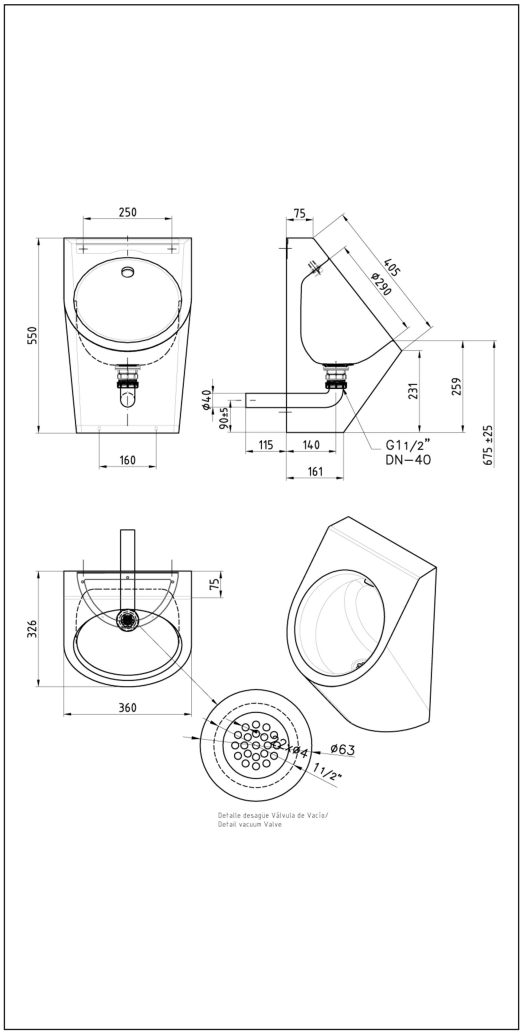
Overall dimension in mm	325 x 360 x 550
Material	Stainless steel AISI 304
Material thickness in mm	1,2 / 1,5
Gross weight in kg	9.80
Net weight in kg	7.00