intra
SCANDINAVIAN DESIGN

Utility sink VK44wall

Art. no. VK44PK
GTIN 7055570000496

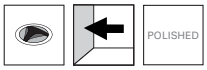



Overall dimension in mm	485 x 385 x 190
Depth in mm	190
Bowl dim. in mm	440 x 340 x 190
Waste hole dim. in mm	52
Volume in L	22
Material	AISI 304
Material thickness in mm	0,8
Installation height in mm	900
Product load in N	1000
Gross weight in kg	2.50
Pcs per pallet	34

Description
Wall hung utility sink in stainless steel. Supplied with fixing brackets.

Installation
Fix supporting bracket and waste to the sink. Fasten the lower part of the upper brackets to the wall according to enclosed drill template, and put the sink on top and fasten with the upper part of the brackets. Fix the supporting bracket to the wall through the two holes in the bracket. Screw and plug are supplied with the product.

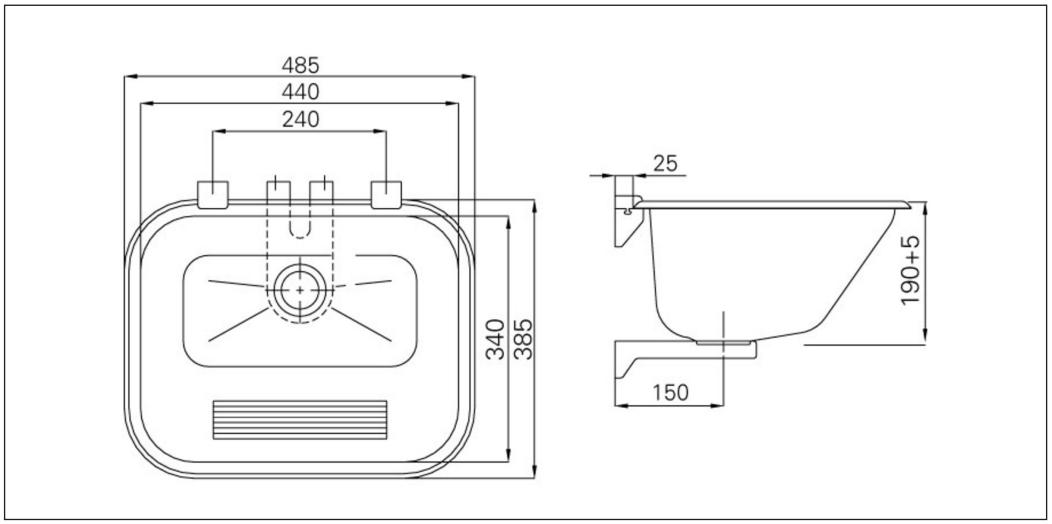

CE