intra
SCANDINAVIAN DESIGN

Utility sink VK44wall

Art. no. VK44STD
GTIN 7393069021967





Overall dimension in mm	485 x 385 x 190
Depth in mm	190
Bowl dim. in mm	440 x 340 x 190
Waste hole dim. in mm	52
Volume in L	22
Material	AISI 304
Material thickness in mm	0,8
Installation height in mm	900
Product load in N	1000
Gross weight in kg	2.50
Weight, pallet	110.00
Pcs per pallet	34

Description
Wall hung utility sink in stainless steel. Supplied with fixing brackets.

Installation
Fix supporting bracket and waste to the sink. Fasten the lower part of the upper brackets to the wall according to enclosed drill template, and put the sink on top and fasten with the upper part of the brackets. Fix the supporting bracket to the wall through the two holes in the bracket. Screw and plug are supplied with the product.

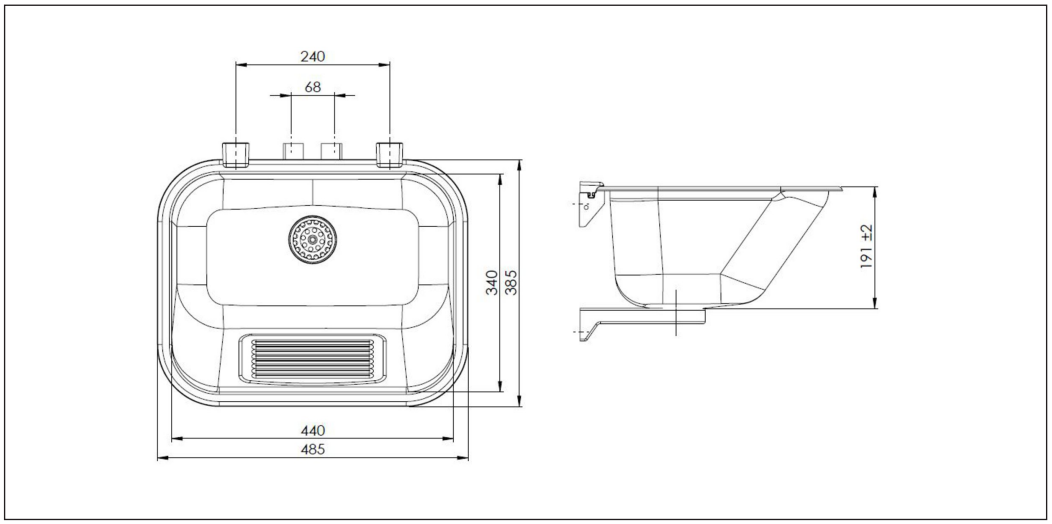

CE

Installation VK44wall

ASSEMBLY:

Included in the box:
* Wash basin
* Mounting equipment
* Installation instructions w / bormal

Supplement: valve

Make sure all parts are in place before assembly commences.

Mount the valve and support bracket to the wash basin.
The wall brackets are fastened to the wall in accordance with 1: 1 drilling template before placing the washbasin in the fastener which is locked by sliding the upper part of the bracket.
The support bracket is then secured to the wall through the mounting holes. Screws and plugs included.

SPARE PARTS:

Cellular Packing: 91099
Mounting bracket upper: 91014
Bracket bracket part: 91015

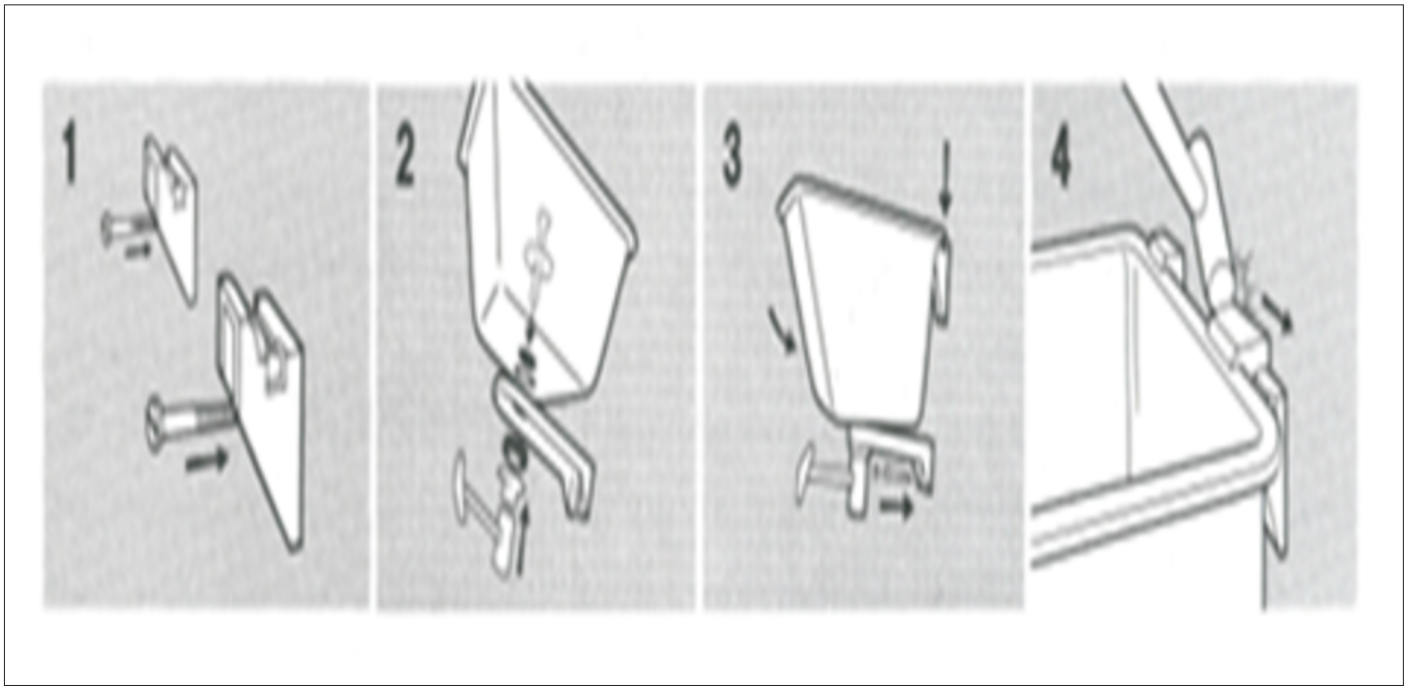

Maintenance VK44wall

MAINTENANCE:
INTRAS PRODUCTS IN STAINLESS STEEL

In order for your stainless steel AISI304 Intra product to retain original quality and appearance, we recommend regular cleaning. Use mild soap or detergents specially designed for stainless steel and clean water. Then wipe the surface with a dry cloth. Never use cleaners containing chlorine, iodine, fluorine or abrasives in stainless steel.
Also avoid contact with acid solutions and other substances that are not compatible with stainless steel.
Remember, for example, foods and skin care products can contain such substances, such as ketchup, juice, salt, some cleansing and nail polish, etc. Remove the spill immediately.

Take care of the following:

* Do not allow water or other liquid to dry. This is to avoid shielding on the surface.
* Even if stainless steel withstands hard handling, it will easily scratch sharp objects. For products with a normal polished (brushed) finish, this will look good when the product is new, but after a while it will be leveled out without the steel losing its shine. For satin and sanded products, the scratches will always be clearly visible. Never use scouring powder or steel wool in stainless steel. In addition to scratching the steel, steel wool leaves small particles that can develop into rust spots that can over time attack the steel.
* Stainless steel must not be in contact with or in chlorine solutions for a long time.
* Silver polish puts spots that can not be removed.