intra
SCANDINAVIAN DESIGN

Utility sink VK60wall

Art. no. VK60OL-1
GTIN 7393069028379





Overall dimension in mm	655 x 505 x 250
Depth in mm	250
Bowl dim. in mm	600 x 450 x 250
Waste hole dim. in mm	52
Volume in L	47
Material	AISI 304
Material thickness in mm	1,2
Installation height in mm	900
Product load in N	1000
Net weight in kg	6.30
Pcs per pallet	16

Description
Wall hung utility sink in stainless steel. Supplied with fixing brackets and hole for overflow.

Installation
Fix supporting bracket and waste to the sink. Fasten the lower part of the upper brackets to the wall according to enclosed drill template, and put the sink on top and fasten with the upper part of the brackets. Fix the supporting bracket to the wall through the two holes in the bracket. Screw and plug are supplied with the product.

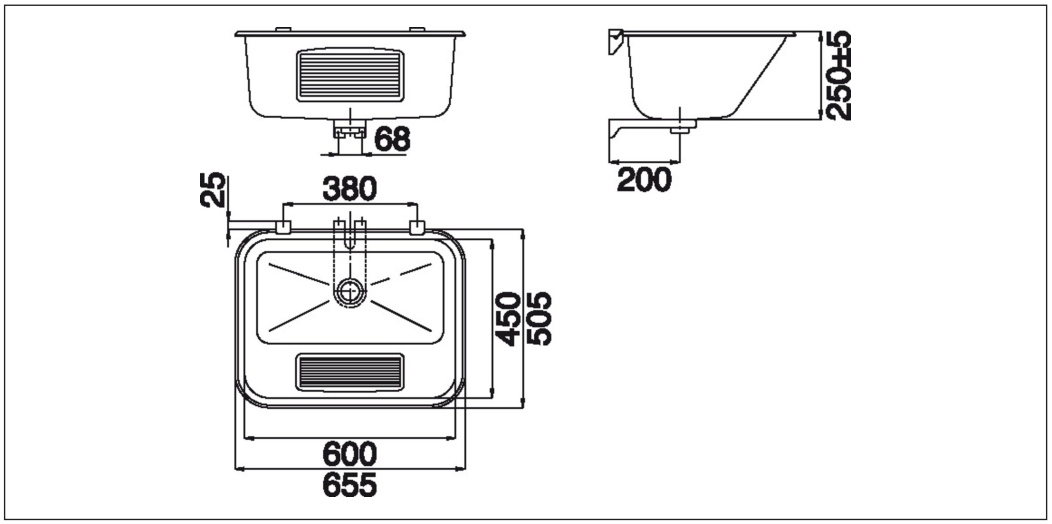

CE