intra
SCANDINAVIAN DESIGN

Wash basin ED1

Art. no. ED1
GTIN 7393069022537





Overall dimension in mm	600 x 415 x 130
Depth in mm	130
Material	AISI 304
Material thickness in mm	1,25
Installation height in mm	850
Product load in N	1000
Gross weight in kg	4.60
Weight, pallet	135.40
Pcs per pallet	24
Made in	Norway

Description
Hand Wash Basin in stainless steel 18/10, for wall mounting.

ED1 is delivered complete with 1 1/4" waste with plug and chain, and integrated wall brackets. With overflow.

Installation
Fix the basin to the wall by fastening the 4 fixing screws throught the holes in the integrated wall bracket. Two strengthening brackets are also supplied and must be fixed before the screws are locked. Screws and plugs are included.

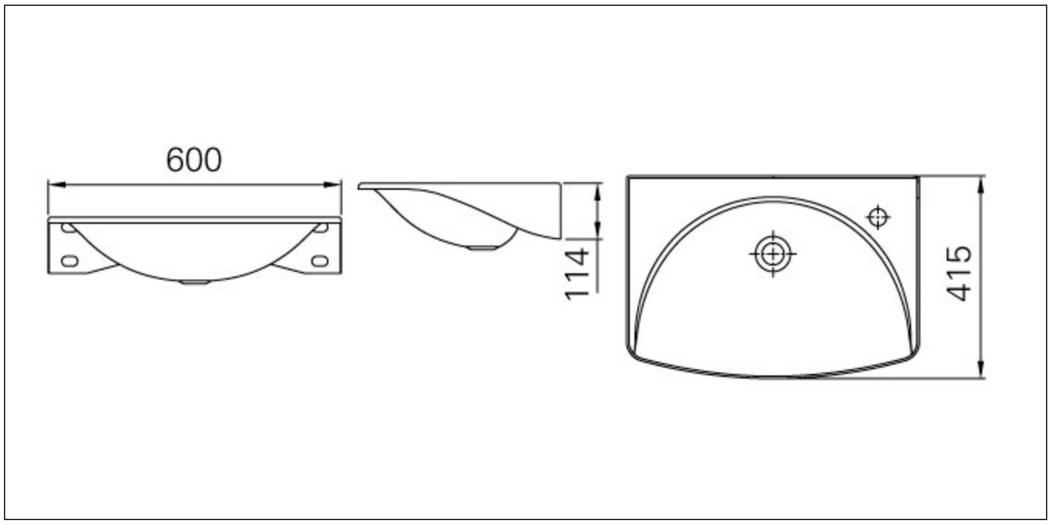

CE

Installation ED1

ASSEMBLY:

Included in the box:
Washstand
* Valve 1 1/4”
* Overflow system 1 1/4” rectangular
* Assembly kit
Ensure that you have all the parts before assembly begins.

Assemble the overflow kit and the valve for the washstand, and any mixer tap.
The washstand is mounted onto the wall with four mounting screws through the mounting holes in the product’s integrated wall bracket.
Two reinforcing brackets are also included with the product and affixed before the screws are screwed tight.
Mounting screws and plugs are supplied. Customised for standard wall frames.

SPARE PARTS:
Overflow system 1 1/4” rectangular: 79123
Valve 1 1/4”: 79018
Assembly kit YMX03

MAINTENANCE:
INTRA PRODUCTS OF STAINLESS STEEL

Several of our products are delivered entirely or partly covered
with plastic wrapping. This wrapping protects the product during
transport. The wrapping must be removed before using the products.

In order for the product to retain its original quality and appearance, regular cleaning is recommended. Use mild soap or products specifically designed for stainless steel and clean water. Then wipe the surface with a dry cloth.
Never use detergents containing chlorine, iodine, fluoride or abrasives. Also avoid contact with acidic solutions and other substances incompatible with stainless steel. Remember that foodstuffs and skin care products may contain such substances; e.g. ketchup, juice, salt, some cleansers, nail polish, etc. Promptly remove spills of such products.

Observe the following:
* Do not allow water or other liquid to dry in. This is to avoid staining the surface.
* Even though stainless steel can withstand harsh treatment, it will easily be scratched by sharp objects. For products with polished (brushed) finishes, this will be very visible when the product is new, but after a period of use, this will be negated as the steel loses its lustre. On surfaces with satin and polished finishes, the scratches will always be visible. Never use scouring powder or steel wool on stainless steel. This will scratch the steel and steel wool will leave small particles that can develop into rust spots.
* Stainless steel must not come into contact with, or be in environments containing, chlorine solutions for long periods of time.
* Silver polish causes stains which cannot be removed.