Utility sink UVK44wall

Art. no. UVK44S1-PK
GTIN 7393069022100

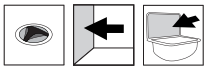



Overall dimension in mm	485 x 409 x 258
Bowl dim. in mm	440 x 341 x 190
Waste hole dim. in mm	Ø52
Volume in L	22
Material	AISI 304
Material thickness in mm	0.8 mm
Installation height in mm	900
Product load in N	1000
Gross weight in kg	3.80
Net weight in kg	2.95
Weight, pallet	146.00
Pcs per pallet	34

Description
Intra UVK44 Universal utility sink is a multifunctional utility sink for wall mounting.
The utility sink has a pre longed rear flange as well as an elevated splash cover. The utility sink is delivered with a complete waste kit with plug, chain and overflow as well as a bucket grid.
Intra UVK44 Universal utility sink is working optimally both as a traditional utility sink but cover all aspects of a bucket sink.

Installation
Fix supporting bracket and waste to the sink. Fasten the lower part of the upper brackets to the wall according to enclosed drill template, and put the sink on top and fasten with the upper part of the brackets. Fix the supporting bracket to the wall through the two holes in the bracket. Screw and plug are supplied with the product.

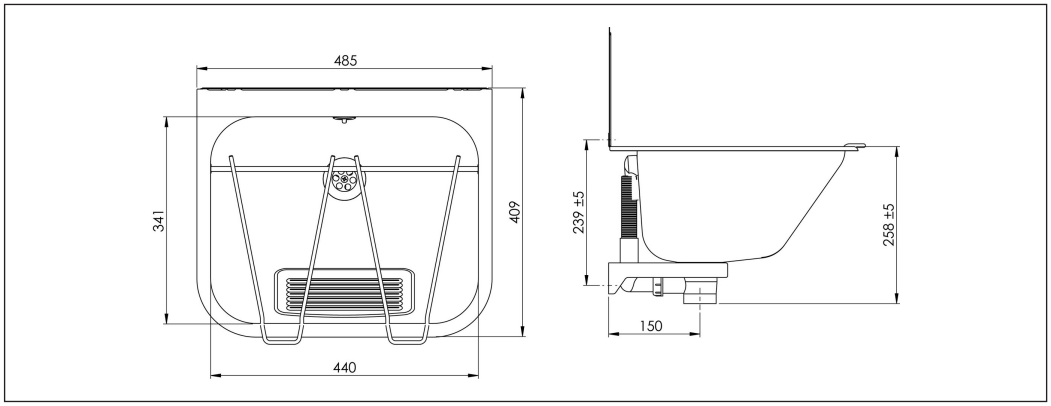

Maintenance UVK44wall

INTRA PRODUCTS OF STAINLESS STEEL

In order for your Intra stainless steel product AISI304 to retain its original quality and appearance we recommend regular cleaning. Use mild soap or cleaning products specifically designed for stainless steel and clean water. Then wipe the surface with a drycloth.
Never use detergents containing chlorine, iodine, fluoride or abrasives on stainless steel.
Also avoid contact with acid solutions and other substances incompatible with stainless steel.
Remember that food and skin care products may contain such substances, e.g. ketchup, juice, salt, certain cleansers, nail polish, etc. Promptly remove spills of such products.

Observe the following:
* Do not allow water or other liquid to dry in. This is to avoid staining the surface.
* Even though stainless steel can withstand harsh treatment, it can easily be scratched by sharp objects. For products with normal, polished (brushed) finish, this will be very visible when the product is new, but after a period of use, this will be negated as the steel loses its lustre. For products with satin and polished finishes, the scratches will always be visible. Never use scouring powder or steel wool on stainless steel. In addition to scratching the steel, wire wool will leave behind small particles that may develop into rust spots which, over time, may corrode the steel.
* Stainless steel must not come into contact with, or be in environments containing, chlorine solutions for long periods of time.
* Silver polish causes stains which cannot be removed.