intra
SCANDINAVIAN DESIGN

Atlantic H 610-KV H1420-610-K

Art. no. AH1420-610-KV
GTIN 7393069020007

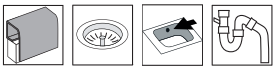



Cabinet size	80
Overall dimension in mm	1420 x 610 x 30
Bowl dim. in mm	340 x 436 x 160
Waste hole dim. in mm	95
Material	EN 1.4301, AISI 304, SS2333
Material thickness in mm	0,7

Description
Temporarily out of stock

Reversible lay-on kitchen sink with two big bowls. Delivers with basket waste, overflow and water trap. 1420 x 610 x 30mm.

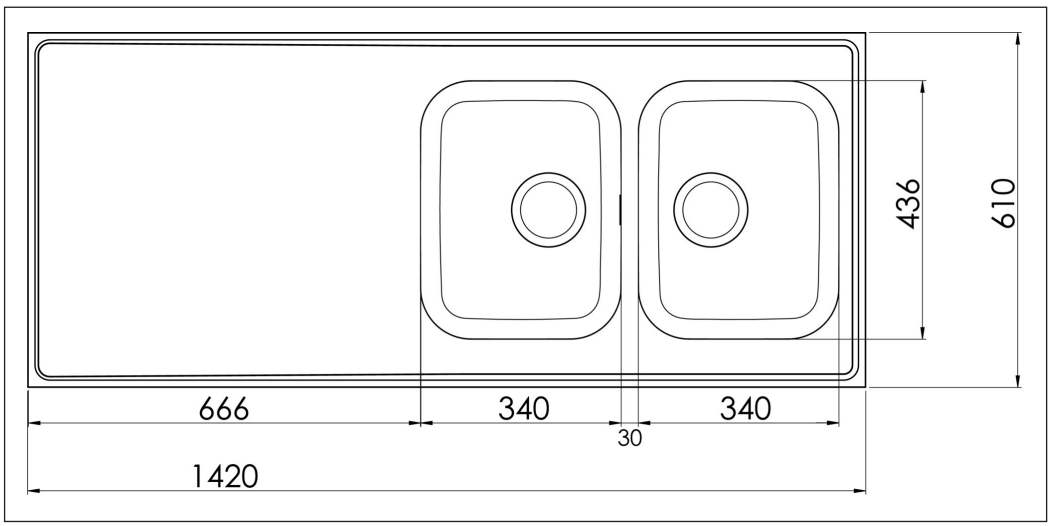

Optional



CE