intra
SCANDINAVIAN DESIGN

Baltic BALTIC400

Art. no.	BALTIC400
GTIN	7393069023244
Ref. no	681244120
DB no.	2096114

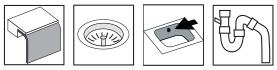

Cabinet size	50
Overall dimension in mm	440 x 440
Bowl dim. in mm	400 x 400 x 180
Waste hole dim. in mm	97
Material	EN 1.4301, AISI 304, SS2333
Material thickness in mm	1,2
Gross weight in kg	5.80
Net weight in kg	5.00

Description
Baltic square bowl. For inset, under and flush mount. Delivered with basket waste, overflow and water trap. Without clips.
Separate article number for flush mount with clips: Baltic400F.

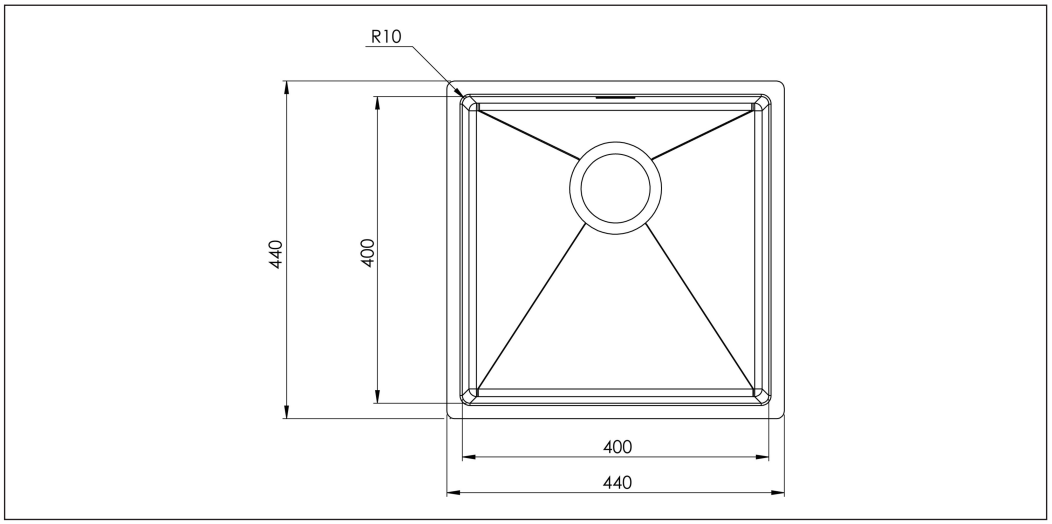

Optional

CE