intra
SCANDINAVIAN DESIGN

Utility sink TempraWall60S1

Art. no. TEMPRA60S1R
GTIN 8719585007572

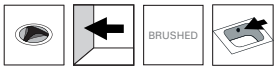



Overall dimension in mm	650 x 520 x 290
Depth in mm	250
Bowl dim. in mm	600 x 450 x 250
Waste hole dim. in mm	52
Volume in L	47
Material	AISI 304
Material thickness in mm	1,2
Installation height in mm	900
Product load in N	1500
Gross weight in kg	5.50
Net weight in kg	4.00
Weight, pallet	93.60
Pcs per pallet	14

Description
Utility sink in stainless steel for wall mounting. Including supporting bracket, backstand, waste with plug and overflow, screws and plugs.

Tempra60S1 without taphole.
Tempra60S1R with taphole to the right.

Installation
Fix the supporting bracket, waste and overflow to the sink. Fix the sink to the wall through the two holes in the backstand and the supporting bracket.

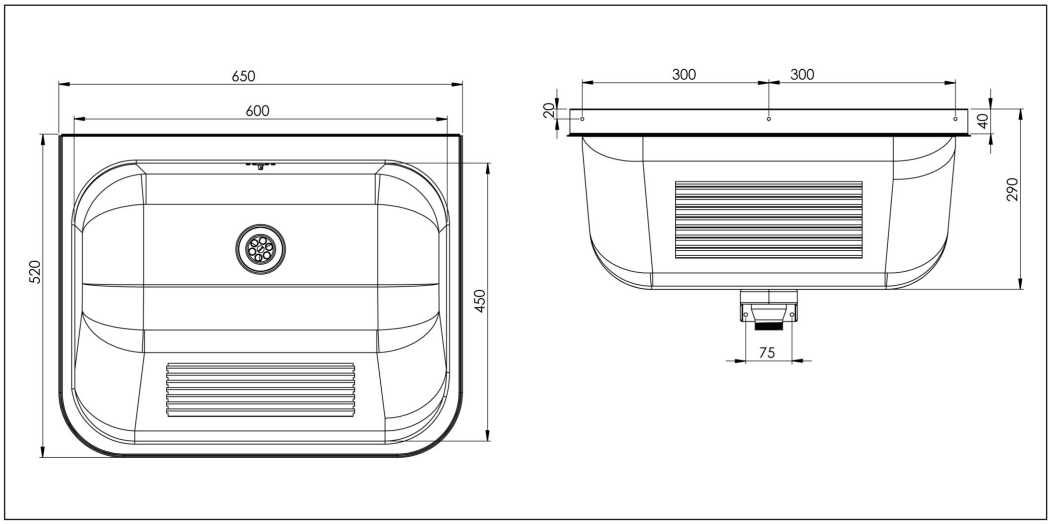

CE